Experimental investigations of diesel and biodiesel blends for low temperature combustion in a diesel engine

Seungmook Oh

Korea Institute of Machinery and Materials

The objective of this study is to understand the effects of intake pressure and intake oxygen concentration on combustion and emissions of ultra-low sulfur diesel (‘‘Diesel’’) and biodiesel(soybean methylene ether) blends and investigate on the low-temperature combustion (LTC) regime that has a potential to simultaneously reduce nitric oxides (NOx) and soot emissions. The present study is an experimental investigation with a 1-liter single-cylinder direct-injection diesel engine at an engine speed of 1400 rev/min under a medium load condition. Engine experiment was conducted under intake pressures, oxygen concentrations, and biodiesel blends of 100–250 kPa absolute, 5–19% by volume(vol%), and from 0% (B000) to 100% biodiesel (B100) at a 20% increment respectively.

Thermal efficiency and carbon monoxide (CO) contour maps revealed two distinctive regions divided at an intake oxygen level of 8 vol% (or an equivalence ratio of 0.85). In the oxygen-sufficient region intake pressure exhibited dominant impacts on combustion duration, stability, and thermal efficiency. The NOx–oot contour map clarifies the location and size of the ‘‘soot barrier’’ in Diesel, which was not observed in B100. B100 achieved simultaneous NOx and soot reduction to 0.2 g/kW h and 0.1 filter smoke number (FSN), respectively, at 150 kPa intake pressure with 11 vol% intake oxygen concentration. Corresponding thermal efficiency was approximately 43%. Increased intake pressure over 150 kPa lowered thermal efficiency at the maximum brake torque (MBT) timing. The apparent net heat release rate traces indicated that most heat release event occurred before top dead center (TDC) and burn duration was elongated when intake pressure was above 150 kPa.

This study also attempted to identify the lowest biodiesel blending rate that achieves acceptable levels of nitric oxides (NOx), soot, and coefficient of variation in the indicated mean effective pressure (COV_{IMEP}). Biodiesel blending was to be minimized in order to reduce the fuel penalty associated with the biodiesels lower caloric value.

The experimental results indicated that the intake oxygen level had to be below 10 vol% to achieve the indicated specific NOx (ISNOx) below 0.2g/kWhr with the B000 fuel. However, a substantial soot increase was exhibited at such a low intake oxygen level. Biodiesel blending reduced NOx until the blending rate reached 60% with reduced in-cylinder temperature due to lower total energy release. As a result, 60%-biodiesel blended diesel(B060) achieved NOx, soot, and COV_{IMEP} of 0.2 g/kWhr, 0.37 filter smoke number (FSN), and 0.5, respectively, at an intake oxygen concentration of 14 vol%. The corresponding indicated thermal efficiency was 43.2%.

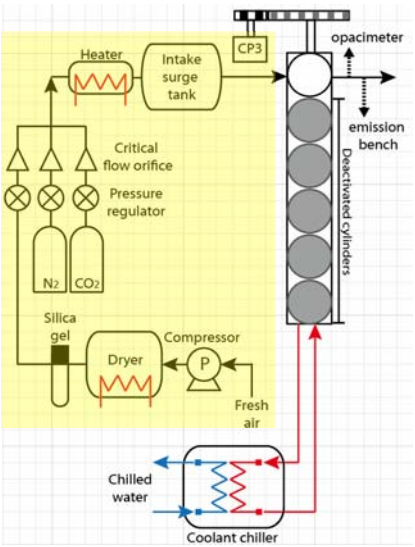

Experimental Setup

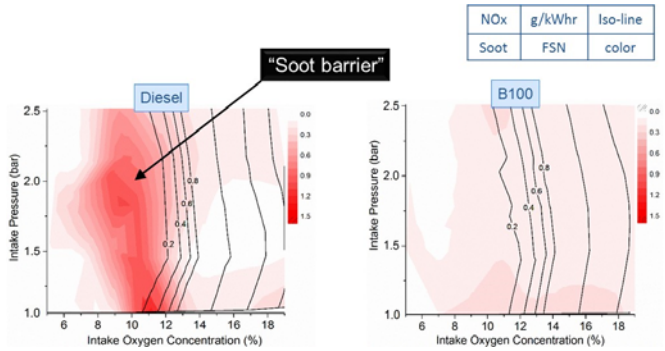

NOx and Soot distributions

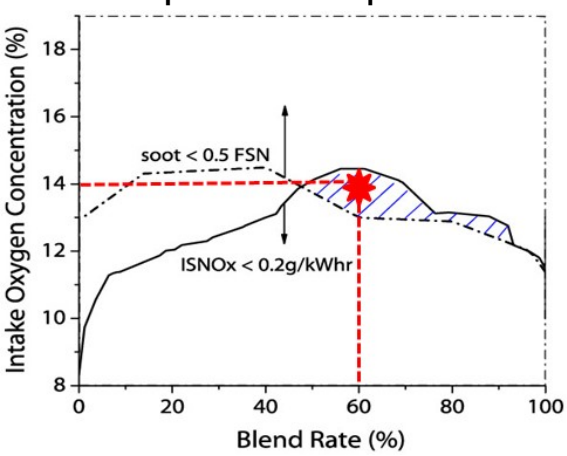

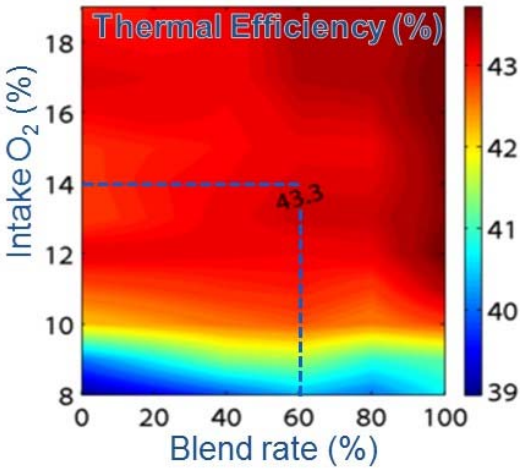

Optimized case to meet NOx and Soot criteria

[Reference]

Fuel 129 (2014) 11−19, ICEF2014-5406