Catalytically Supported Combustion Concepts for H2-Rich Fuels in Gas Turbine Engines

I. *Mantzaras, P. Jansohn*

Paul Scherrer Institute, Switzerland

PAUL SCHERRER INSTITUT

Catalytic combustion holds promise as an alternative to lean premix combustion especially for H_2-rich fuel gases as the highly reactive H_2 does not pose problems in terms of the light-off characteristics of catalytic modules (as is the case if methane is the main fuel species).

The combustion of syngas or hydrogen-rich fuels (> 80 % vol. H_2) is also relevant for gas turbine cycles with integrated solid fuel gasification combined with pre-combustion carbon capture. The significantly higher flame speed and drastically reduced auto-ignition delay times of hydrogen containing fuel mixtures increase the risk of flame flashback, i.e. anchoring of the flame close to the fuel injection. Hybrid combustion approaches, such as the catalytic-rich / homogeneous-lean combustion concept can mitigate the associated risks (over-heating of burner components) and the NOx emissions very effectively.

Staged catalytic combustion of hydrogen/ air mixtures

In the catalytic-rich/gaseous-lean hybrid combustion concept of Fig. 1, part of the air and all of the fuel are driven in a catalytic reactor at fuel-rich stoichiometries ($\varphi_{CAT} > 1$). Hot combustion products and unconverted fuel are subsequently mixed with the bypass air, forming a fuel-lean homogeneous (gas-phase) combustion zone. This approach is suitable for a wide range of fuels that include low calorific value biofuels, whereby flame stability is an issue, and also for hydrogen-rich fuels for which conventional lean-premixed gaseous combustion entails the risk of flame flashback.

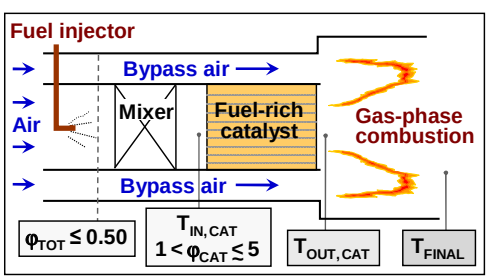

Figure 1. Catalytic-rich/gaseous-lean combustion concept.

Investigation of the catalytic kinetic interactions between H_2 and CO over platinum in the temperature range 550-650 K (a range of particular importance for GT part-load or idle operating conditions) was initially undertaken. In–situ spatially resolved measurements of gas-phase species over the catalyst boundary layer (by means of spontaneous Raman) and detailed simulations have shown an important result: for lean H_2 and CO stoichiometries in air, H_2 inhibits the catalytic oxidation of CO below a critical transition temperature. It was shown that the critical transition temperatures had a main dependence on the total (H_2 and CO) equivalence ratio φ (e.g. 550 K at φ = 0.13 and 600 K at φ = 0.26) and a weaker dependence on the H_2:CO volumetric ratio (typical results are shown in Fig. 2). An updated surface reaction mechanism was finally proposed, capturing this chemical inhibition. The good agreement between the measured and predicted species profiles attests to the aptness of the employed H_2/O_2 chemical reaction mechanisms. With numerical studies it could be shown that the inhibiting effect of H_2 had a major impact on the start-up behavior of the catalytic module.

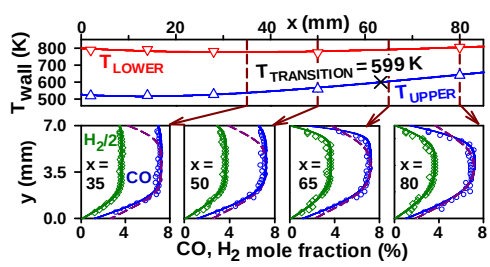

Fig. 2: H_2:CO catalytic combustion in a 7-mm-height Pt-coated channel

H_2:CO volumetric ratio 1:1, total equivalence ratio $\varphi = 0.26$, and $p = 5$ bar. (a) Top: temperature measurements (upper triangles: upper wall, lower triangles: lower wall). Bottom: Raman-measured transverse profiles of H_2 (triangles) and CO (circles) and predicted transverse species profiles at four axial positions (solid lines: H_2/CO catalytic chemistry, dashed line: only CO chemistry). For this condition the deduced transition temperature is 599 K. From Zheng, Mantzaras and Bombach, Combust. Flame 161: 332346, 2014.

Additional to the basic kinetic studies, a lab scale reactor model based on the concept in Fig. 1 has been built and tested (cooperation with FHNW, Institute for Thermo- and Fluid-Engineering).
The hybrid catalytic/gas phase hydrogen combustion burner has been built at FHNW and then installed at PSI's optically accessible high-pressure rig for testing, whereby optical measurements were applied (laser induced fluorescence of the OH-radical and OH* chemiluminescence) in the catalytic and gas-phase combustion stages. Exhaust measurements attested substantial reduction of NOx emissions with this concept.

Optically accessible Rich/Lean (R/L) staged burner

The burner comprises two stages, an upstream catalytic stage and a follow-up lean-homogeneous stage. The first stage has a length of 430 mm and consists of three concentric cylindrical tubes (Fig. 3); the two outer ones are made of quartz glass and the inner one is made of steel. The steel tube is coated with a bimetallic Pt/Pd catalyst on its outer surface. The three tubes define two annular gaps. Rich combustion takes place in the inner annular gap. Air for the rich combustion stage is delivered from the outer annular gap through an arrangement of three holes in the inner quartz tube. The bypass air required for lean combustion flows inside the metal catalytic tube, thus cooling the rich stage. At the end of the rich stage both flows, the bypassed air and the rich combustion products (H2, N2 and water steam), are discharged in the follow up lean stage module (not shown in Fig. 3) The latter module is also completely optical accessible.

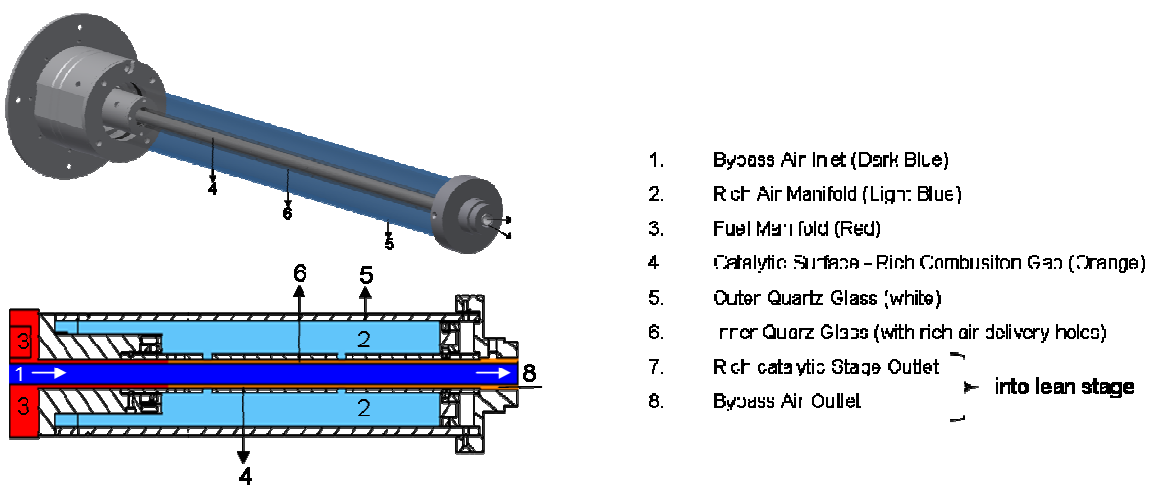

Fig.3. Schematic of the rich-catalytic stage.

The results achieved (Fig. 4) indicate that by decreasing the equivalence ratio in the catalytic module to $\varphi_{CAT} = 2$ (i.e. by increasing the hydrogen conversion in the catalytic stage) the NOx emissions at the end of the gaseous combustion zone drop by a factor of about eight.

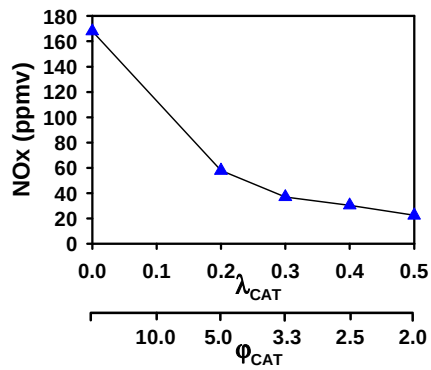

Figure 4. NOx emissions as a function of the rich equivalence ratio (φ_{CAT}) in the catalytic module (air excess ratio $\lambda_{CAT} = 1/\varphi_{CAT}$). Pressure is 8 bar.

References

[1] M. Schultze, J. Mantzaras, R. Bombach, K. Boulouchos, Proc. Combustion Institute 34, **2013**, http://dx.doi.org/10.1016/j.proci.2012.1005.1029

[2] Zheng, Mantzaras and Bombach, Combustion and Flame 161: 332¬346, **2014**.